MACHINING OPTIONS
PRICELIST ITEM, QUALITIES

NOVATOP

CONTENT

Machining options 3-9

Pricelist items 11-15

Quality

Non-visual (C) 16

Visual (B) 17

Quality Specifications 18

Version: 04/2020

MACHINING OPTIONS NOVATOP SYSTEM

CNC HUNDEGGER PBA

Maximum format: 3 x 12,5 m
Tolerance: cca ±0,5–1 mm

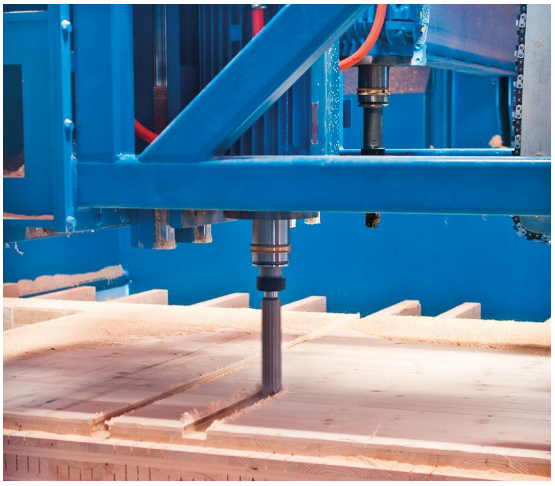

Tools

Circular saw:
ø 750, thickness 6.8 mm, depth of cut 250 mm
The saw can be rotated through 360° and skewed from 0° to 90°.
A set of 5 (9) circular saws, ø 400 mm, thickness 8 (4) mm
(e.g. for acoustic panels).

Chainsaw:
Chain thickness 12 mm. Slat width 200 mm. The saw can be rotated through 360° and skewed from 0° to 90°. The corners can be made accurately without a radius.

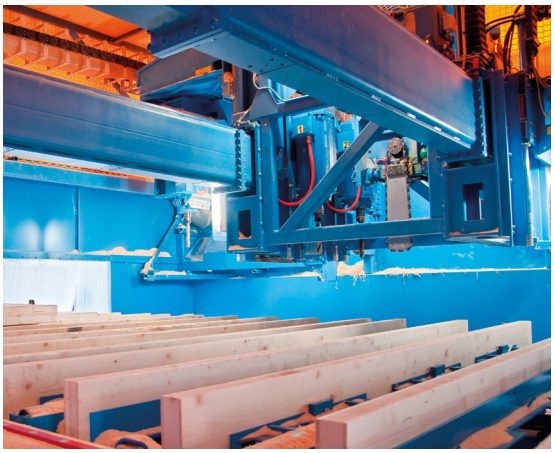

Milling tools:
Vertical milling can create any number of openings with various profiles including grooves and channels etc.
ø 60 mm – spiral shank mill, length 180 mm
ø 40 mm – plate shank mill, length 180 mm
ø 30 mm – spiral shank mill, length 180 mm
ø 350 mm – cylindrical milling cutter, width 40 mm
ø 500 mm – cylindrical milling cutter, width 40 mm

Drills:
ø 30 mm, length 2,000 mm (for drilling of openings for electrical wiring)
ø 15 mm, length 100 mm (standard drilling)

Software: Cadwork CAD/CAM , Hundegger Cambium

Warning: the section surfaces and the milled surfaces always correspond to no-visual quality.

CNC HAMUEL REICHENBACHER

Maximum format: 6 x 2,5 m
Tolerance: ±0,5 mm

Tools

Circular saw:
ø 300 mm, thickness 3.2 mm
ø 450 mm, thickness 4 mm
The saw can be rotated through 360° and skewed from 0° to 90°

Milling tools:
Vertical milling can create any number of openings with various profiles including grooves and channels etc.
ø 8 mm – spiral shank mill, length 30 mm
ø 10 mm – spiral shank mill, length 40 mm
ø 20 mm – spiral shank mill, length 50, 120 mm
ø 30 mm – spiral shank mill, length 180 mm
a set for the spring and the groove
a set for the dowtail joint (depth 22 mm).

Drills:
ø 12 mm, length 100 mm, ø 15 mm, length 100 mm

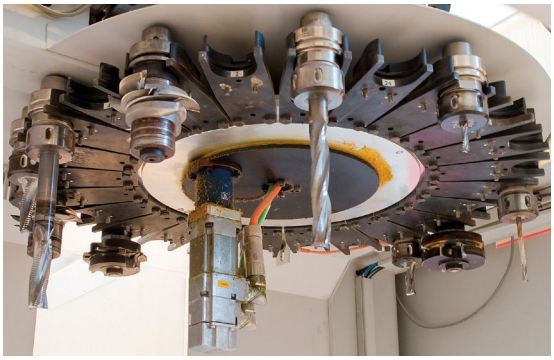

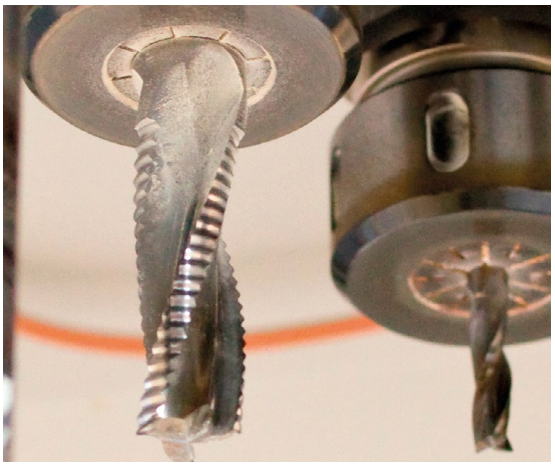

Warning: the section surfaces and the milled surfaces always correspond to no-visual quality.

MACHINING OPTIONS NOVATOP SYSTEM

CNC HOUFEK FENIX

Maximum format: 6 x 2,5 m
Tolerance: ±0,5 mm

Tools

Circular saw:
ø 300 mm, thickness 4.4 mm
ø 450 mm, thickness 4 mm
The saw can be rotated through 360° and skewed from 0° to 90°.

Milling tools:
Any number of openings of various shapes can be milled and various profiles of grooves and channels, etc. can be created vertically, from above.
ø 8 mm – spiral shank cutter, length 30 mm
ø 10 mm – spiral shank cutter, length 40 mm
ø 20 mm – spiral shank cutter, length 50, 120 mm
a set for the spring and the groove

Drilling head (15 drills):
ø 8 mm, length 100 mm

ø 10

CNC HOUFEK SCORPION

Maximum format: 4 x 2 m
Tolerance: ±0,5 mm

Tools

Circular saw:
ø 300 mm, thickness 4,4 mm
The saw can be rotated through 360° and skewed from 0° to 90°.

Milling tools:
Any number of openings of various shapes can be milled and various profiles of grooves and channels, etc. can be created vertically, from above.
ø 8 mm – spiral shank cutter, length 30 mm
ø 10 mm – spiral shank cutter, length 40 mm
ø 20 mm – spiral shank cutter, length 50, 120 mm
a set for the spring and the groove
a set for the production of floor panels

Drilling head (15 drills):
ø 8 mm, length 25 mm, ø 10 mm, length 25 mm,
ø 16 mm, length 25 mm

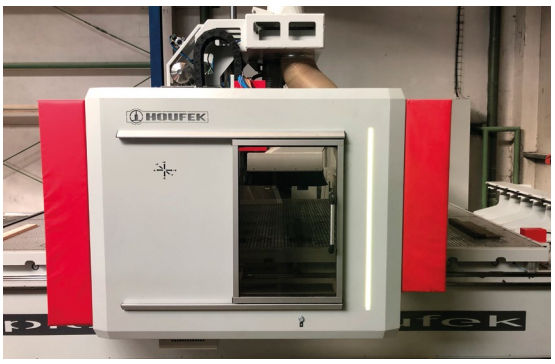

CNC HUNDEGGER SPEEDCUT

Maximum format: 0,2 x 0,45 x 13 m

Tools

Circular saw:
ø 720 mm, five-axis

Milling tools:
Bottom cutter 20–30 mm – length approx. 100–150 mm
(milling from the bottom only)
Revolving cutter includes – 300 mm cylindrical cutter,,
width 40 mm, max machining depth 73 mm
Shank cutter 20–30 mm, length 100–150 mm
(milling from the side only)

Drills:
ø 15 mm, length 100 mm

NOTES

STANDARD TOOLS

Machining is possible from above and from different sides but not from the bottom. During machining, the panels cannot be turned. Other machining options might be available after consultation.

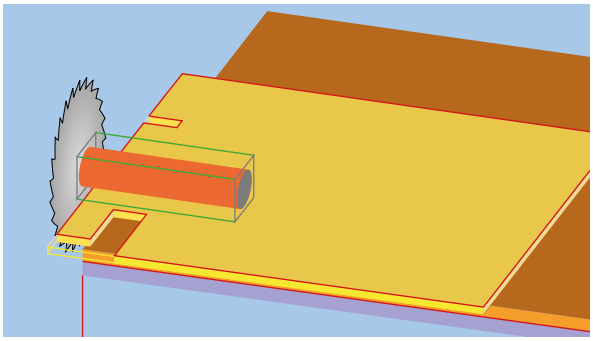

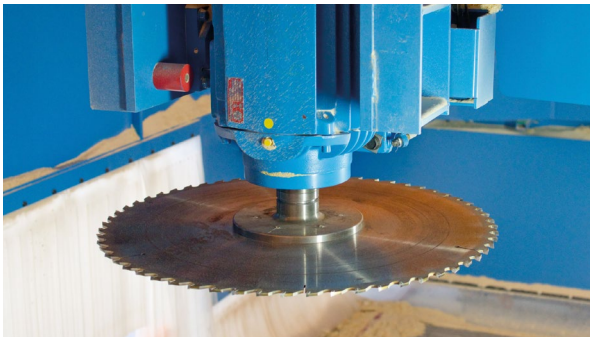

Circular saw ø 750, thickness 6.8 mm, depth of cut 250 mm. The saw can be rotated through 360° and skewed from 0° to 90°.

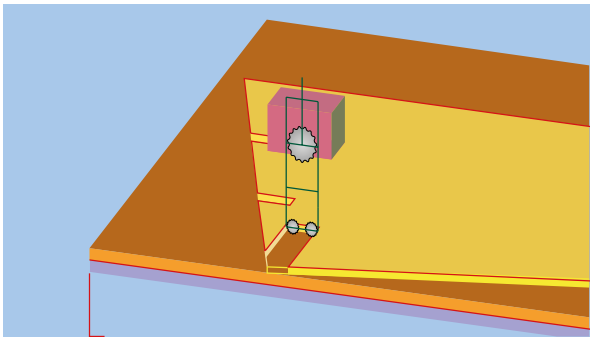

Chain thickness 12 mm, slat width 200 mm (minimum width of cutting 210 mm). The saw can be rotated through 360° and skewed from 0° to 90°.

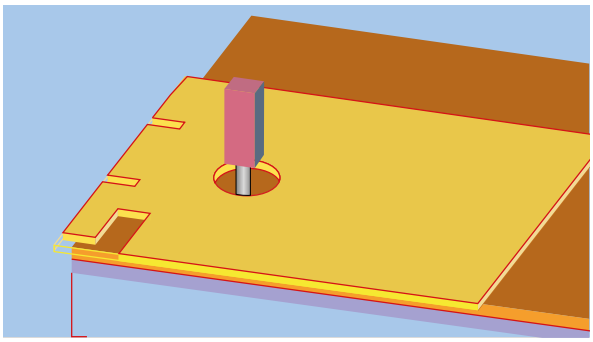

Shank mill - milling options are determined by the dimensions of these tools.

Cylindrical milling cutter.

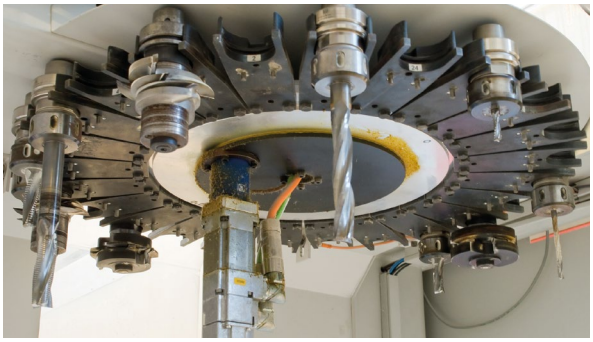

Milling tools.

MACHINING OPTIONS NOVATOP SYSTEM

TRIMMING INTO SHAPES

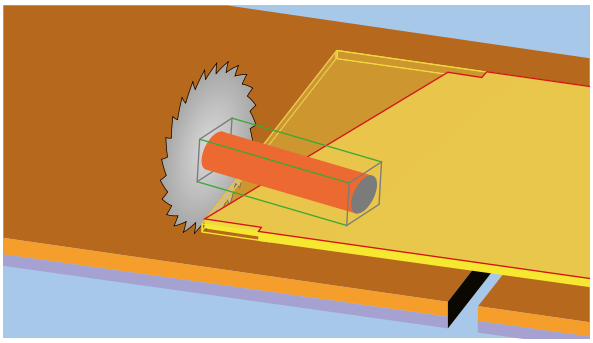

Circular saw – cutting of various angles.

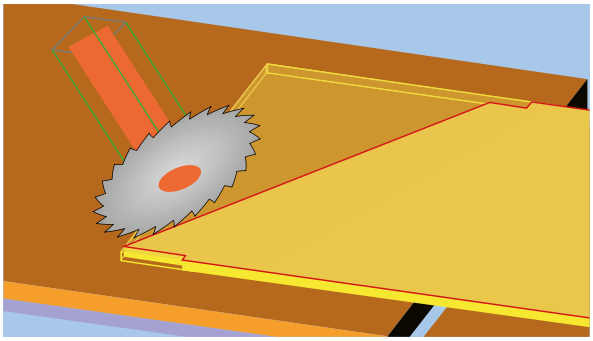

Circular saw – the saw can be skewed under various angles.

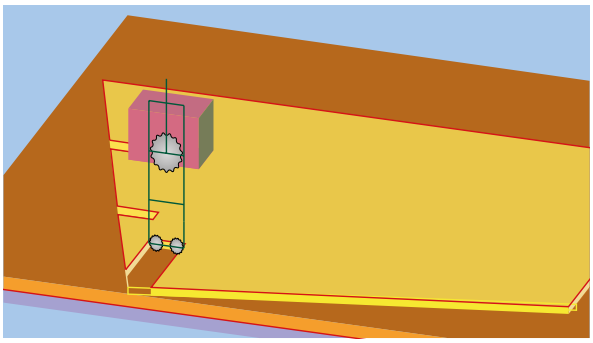

Chainsaw – minimum cutting width 210 mm.

Cutting of the shape with a chainsaw (without a radius).

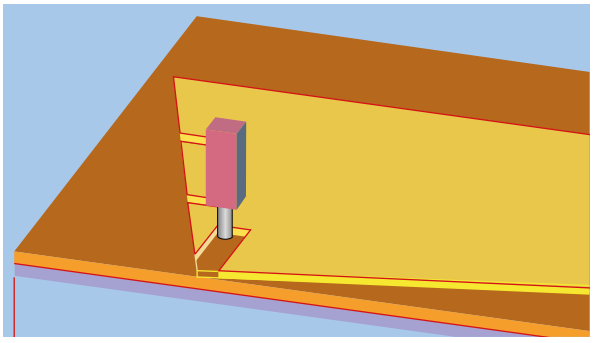

Shank mill.

Final cutting of the shape with a shank mill (with a radius).

CUTTING OF OPENINGS

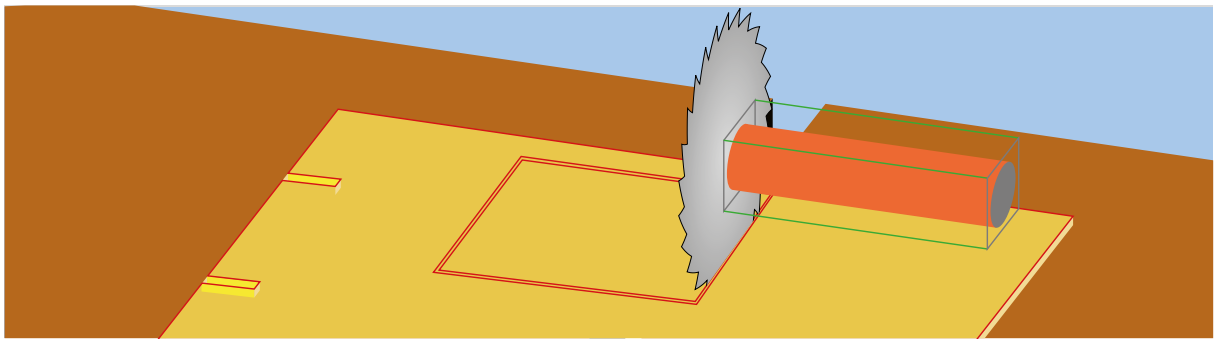

1. Circular saw – incision of the opening (not possible to cut out the entire opening).

Various formats and sizes of the openings.

2a. Final cutting with a chainsaw – execution without a radius (no-visual quality).

2b. Final cutting with a milling cutter – execution with a radius (visual quality).

Detail of trimming with a milling cutter – execution with a radius (visual quality).

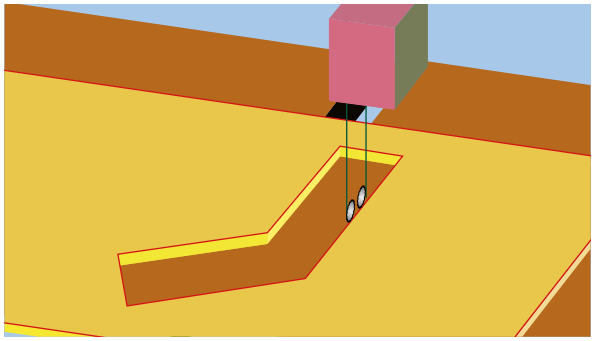

3. Chainsaw– cutting of various shapes. Execution without a radius (no-visual quality).

Minimum cutting width 210 mm.

MACHINING OPTIONS NOVATOP SYSTEM

CUTTING OF OPENINGS

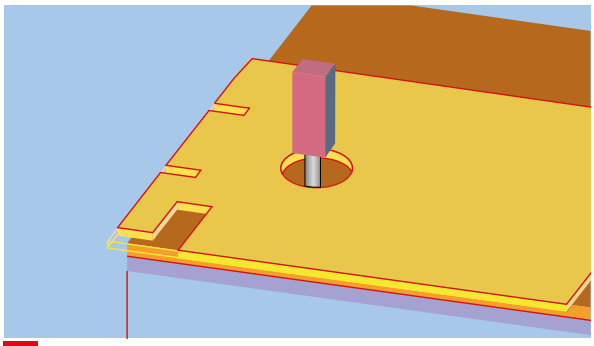

4. Shank mill – execution with a radius (visual quality).

Any number of openings of various shapes can be milled from above.

Milling of round openings.

Milling of angular openings, execution with a radius.

GROOVES

Various profiles of grooves and channels can be milled vertically, from above.

Grooves from the side can be made with a saw.

CONNECTIONS FOR OVERLAPPING

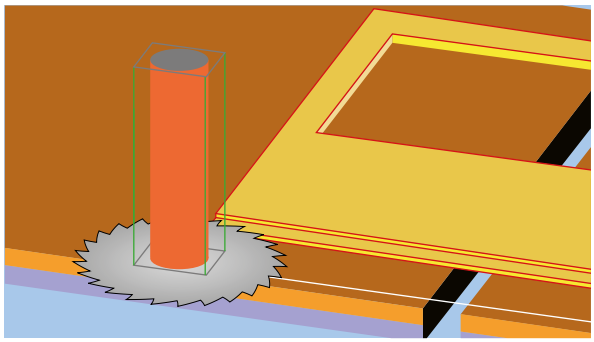

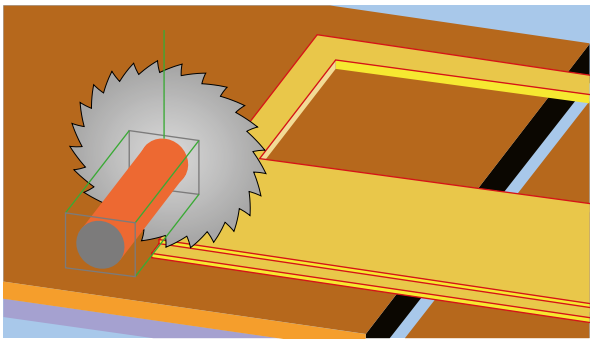

Circular saw - cutting horizontally and vertically to form joints..

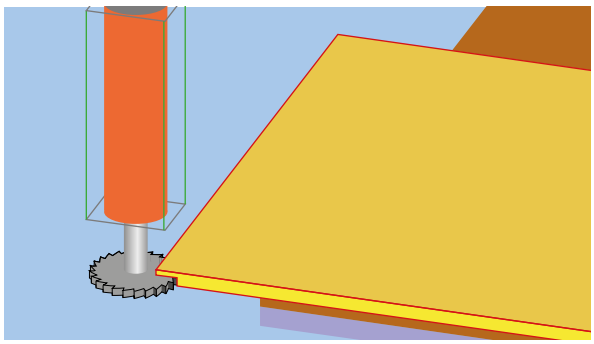

Cylindrical milling cutter – possibility of milling from the underside (maximum depth 150 mm from the edge).

OTHER JOINTS

Finger joint.

Tongue and groove.

MACHINING OPTIONS NOVATOP SYSTEM

OPENINGS FOR ELECTRICAL WIRING

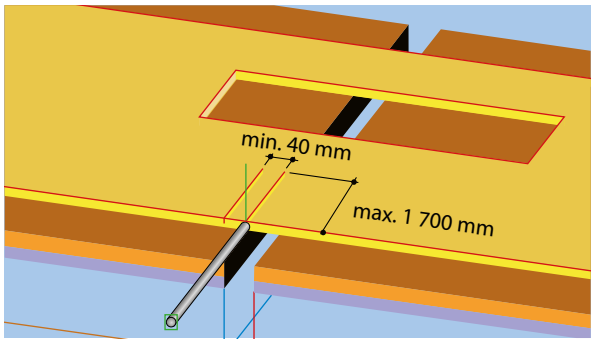

1. Drill – drilling is possible only from one side.

2. Milling cutter – milling of grooves before gluing of panels.

ACOUSTIC PANELS - perforation into different profiles

Profile Suzanna

Profile Marilyne

Profile Giulia

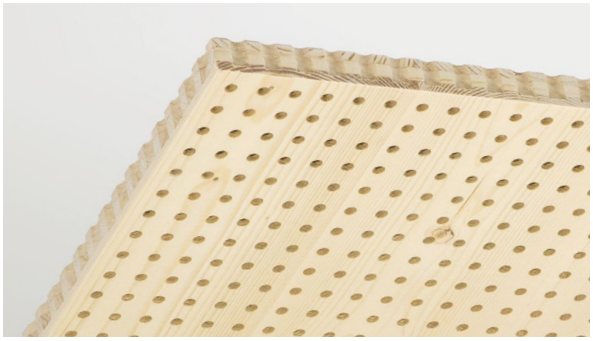

Profile Lucy

SPECIAL PROJECTS

It is possible to create different shapes according to the data in CAD. Machining is performed with a shank mill perpendicularly to the surface of the panel.

PRICELIST ITEMS
NOVATOP ELEMENT/OPEN

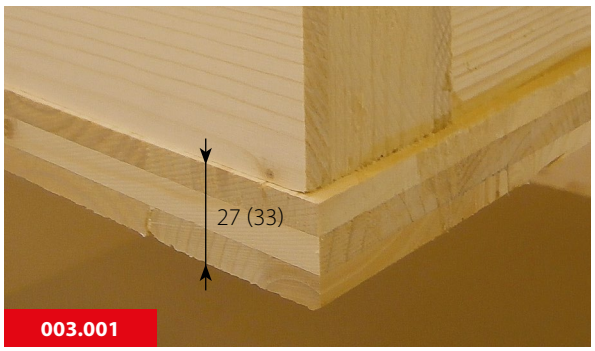

Fire resistance REI 45 min (SWP 27 or 33 mm).

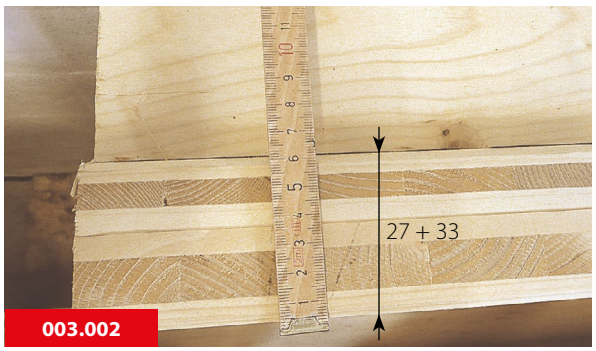

Fire resistance REI 60 min (SWP 27+33 mm).

Filling with mineral insulation ISOVER DOMO.

Filling with wood-fibre insulation.

Fitting of insulation into the longitudinal joint.

Fitting of fireproof tape into the longitudinal joint.

Fireproof tape.

PRICELIST ITEMS
NOVATOP ELEMENT/OPEN

Limestone filling (40, 60, 80 kg/m^2)

Enclosure of the visual cut-out with a solid-wood panel of 60 mm.

Reinforcement with solid wood fill at the point of pressure.

Reinforcement with solid wood fill at the point of pressure.

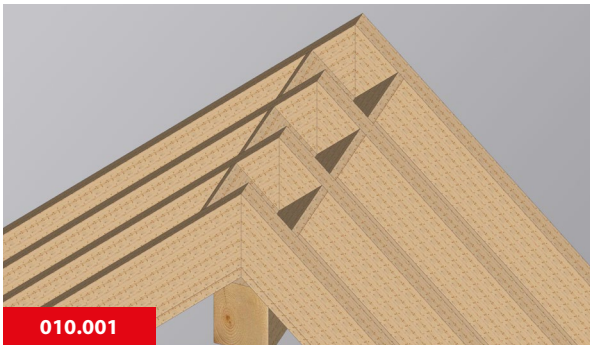

Installation of the element at the ridge.

Chamfer cut of the whole element.

Machining of installation - single-stage.

Machining of installation - two-stage.

PRICELIST ITEMS
NOVATOP ELEMENT/OPEN

Cut-out in the area of the element - circular/angular up to 2,99 m^2.

Cut-out in the area of the element over 3 m^2.

Drilling of holes to the diameter of ø 200 mm

Drilling of holes into the ribs for wiring and piping installations.

Longitudinal cut-out in the upper board, unglued for wiring and piping installations.

PRICELIST ITEMS
NOVATOP SOLID

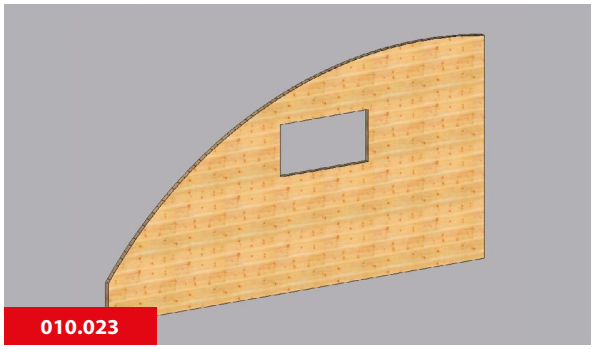

Round machining.

Cut-out up to 2,99 m^2.

Cut-out over 3 m^2.

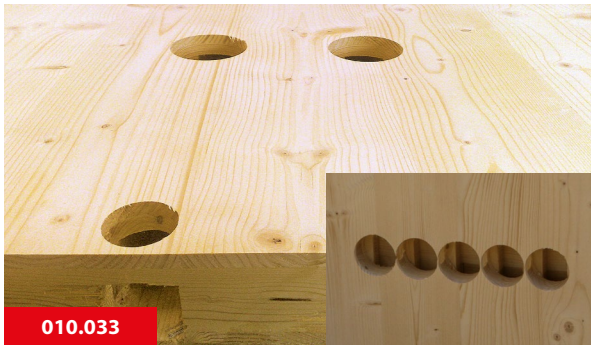

Machining for installations.

Preparation of connection and installation SOLID 84, 124 mm.

Preparation of connection and installation SOLID 84, 124 mm.

Preparation of connection and installation SOLID 62 mm.

PRICELIST ITEMS
ACCESSORIES

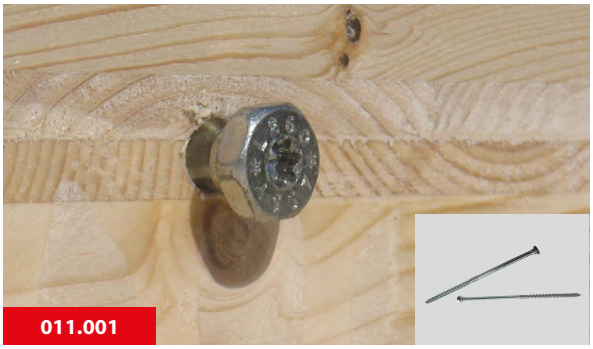

Suspension bolts (SOLID).

Suspension metal shackle (SOLID).

Suspension shackles (4 pcs for one ELEMENT).

Ratchet.

Suspension eye (OPEN).

Internal thread (OPEN).

Gooseneck pipes (ELEMENTS).

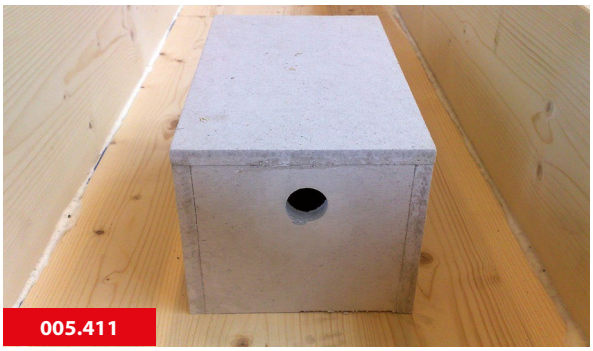

Fire safety cabinet (ELEMENTS/OPEN).

SPRUCE – NON-VISUAL QUALITY (C)

Structural element. The surface is ground with repaired larger size knots, closed, puttied, longitudinal joints are acceptable, sap stains, and adhesive residues may appear. Classification of quality according to the internal regulations of AGROP NOVA a.s.

QUALITY SPECIFICATIONS NOVATOP SYSTEM

SPRUCE: VISIBLE – VISUAL QUALITY (B)

A construction element intended for the final interior design. The surface lamellas are of higher quality timber. The surface is sanded with repaired knots from branches of different sizes, closed, puttied, without colouring. Pulp is allowed to a lesser extent. Small abrasions and bumps to a depth of 1 mm and an area of 10 mm^2 are permitted. Defects on the edge of the board are allowed up to 10 mm. The section surfaces and the milled surfaces always correspond to non-visual quality. When packed, the panels are interleaved with cardboard. Classification of quality according to the internal regulations of AGROP NOVA a.s.

QUALITY SPECIFICATIONS SPRUCE

CLASSIFICATION OF QUALITY ACCORDING TO THE INTERNAL REGULATIONS OF AGROP NOVA A.S.

Features for sorting		
	Visual quality (B)	Non-visual quality (C)
General requirements, longitudinal joints	flawless gluing without open joints	flawless gluing, repaired longitudinal joints allowed
Structure, course of fibres, compression wood	roughly grown and light compression wood allowed	no special requirements
Knottiness	Occasionally black knots-eyes allowed up to the diameter of 10 mm *(Healthy, firmly ingrown knots without special requirements)	no special requirements
Repair natural knots	2 knots next to each other are not allowed *(Allowed up to the diameter of 35 mm)	no special requirements
Pitch pockets	occasionally allowed up to 5 x 50mm, no clumps or mass occurrence	no special requirements
Repaired pitch pockets	occasionally allowed above 5 x 50 mm repaired with a boat-shaped wedge	allowed above 5 x 50 mm repaired with a boat-shaped wedge
Bark	not allowed, *(Bark pockets repaired up to 35 mm)	occasionally allowed
Cracks	shallow surface cracks occasionally allowed, open end cracks up to 50 mm of length occasionally allowed	no special requirements
Core /pith/	pith allowed in the total length up to 600 mm straight or as a sum of passing parts	no special requirements
Infestation with insect, worm	not allowed	not allowed, worm occasionally allowed
Discolouration, fungus	allowed blue stains up to the width of 10 mm and length of 200 mm	no special requirements rot not allowed
Thickness of glued joints	max. 0,3 mm	no special requirements
Surface machining	occasionally allowed small defects	occasionally allowed small defects
Quality of the panel edge such as bulges, battered places	up to 10 mm from the edge occasionally allowed	up to 50 mm from the edge occasionally allowed
Combination of different wood species	not allowed	allowed
Width of individual parts - excluding the outer ones	at least 60 mm	no special requirements
Wood pattern	no special requirements	no special requirements

QUALITY SPECIFICATIONS NOVATOP SOLID/ELEMENT/OPEN

Warning: The panels must be at all times protected against adverse weather conditions.

The recommended relative humidity of the environment in which NOVATOP panels are installed is 55% at 20°C. Wood cracks may occur due to low air humidity.

Warning: Wood properties of this product are maintained, so they respond to changes in temperature and humidity by shrinking or, possibly, by swelling. Improper storage and use in extreme conditions (extreme temperatures and humidity) can cause cracking and distortions.

The producer assumes no liability for the damage of the product due to improper storage, processing, unsuitable use or nonobservance of work procedures during the assembly.

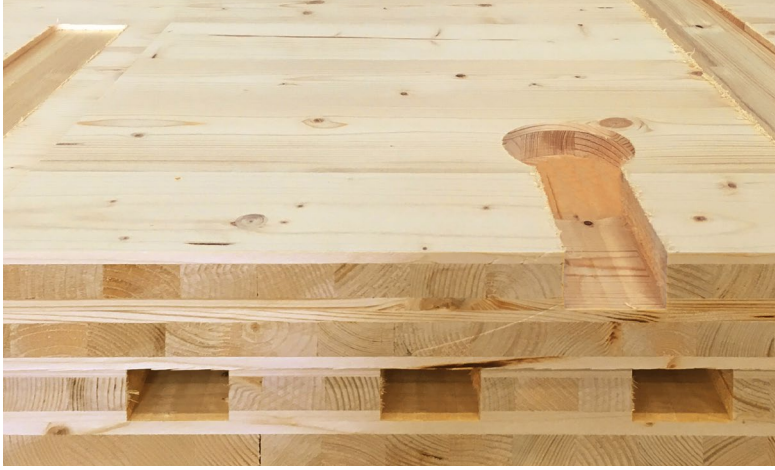

www.novatop-system.com

Manufacturer: AGROP NOVA a.s.
Ptenský Dvorek 99
798 43 Ptení
Czech Republic
tel.: +420 582 397 856
novatop@agrop.cz
www.novatop-system.com

Manufacturer certificates:

The technical documentation and the certificates can be downloaded at www.novatop-system.com